2006 *FIRST* Robotics Competition

1/13/2006	Team Update	2

→ Special Notices ←

******* SPECIAL UPDATE *******

→ General Notices ←

Documents and Updates

Vision System Document Updates –

A new version of the ***CMUCam2 Pan- Tilt Assembly Instructions*** has just been released featuring improved illustrations and simplified instructions to assemble the camera support. The document, from Innovation First, is available for download via the *FIRST* Documents & Update web page/ Section 5 - The Robot, in the 2006 Robotics Competition CMUCam2 Vision Documents folder.

The **2006 CMUCam2 Workbook** has also been updated to Rev B and includes the new Pan -Tilt Assembly section along with Camera setup, Calibration, and Code programming guidelines using easyC and/or MPLAB.

Question & Answer System

Section 0 - Introduction

No changes.

Section 1 - Communication

No changes

Section 2 – Team Organization

No changes.

Section 3 - The Arena

No changes.

Section 4 - The Game

No changes.

Section 5. The Robot (includes the Kit of Parts)

2006 *FIRST* Robotics Competition

1/13/2006	Team Update	2

ROBOT

1. Update to section 5.1.3 - corrects the link to obtain a copy of the Chassis Kit manual on the Innovation First web site.

FIRST 2006 Chassis Kit Manual – Information to assemble Chassis Kit and Drive Train

available at: http://www.ifirobotics.com/kitbot.shtml..

2. Update to Rule 35 – Adds "At the start of… "

At the start of the match bumpers may extend outside the horizontal starting dimensions for the robot (as specified in Rule <R05>) by up to a maximum of 3-1/2 inches per side, nothing other than pool noodles and cloth may extend more than 1 inch beyond the robot boundaries.

3. Update to Rule 43 – Add "and/or" and "or in replacement of ". Rule reads as follows:

–Teams may purchase either one additional 4-slot Maxi-block circuit breaker panel *and/or* one 2005 FRC circuit breaker panel, and utilize it on their 2006 robot in addition to, *or in replacement of,* the circuit breaker panels provided in the kit of parts.

4. Update to Rule 54 – the change allows the robot DC Power to be configured using the Fuse distribution panels supplied in the 2006, or to use the IFI Distribution panel from last year's kit.

The EX18-12 Battery, the Main 120 Amp Circuit Breaker, and the Circuit Breaker distribution panels must be connected as shown *in the 2006 (or optionally) as in the 2005 diagrams shown below.* The EX18-12 Battery must use the Anderson Connector. …. ….

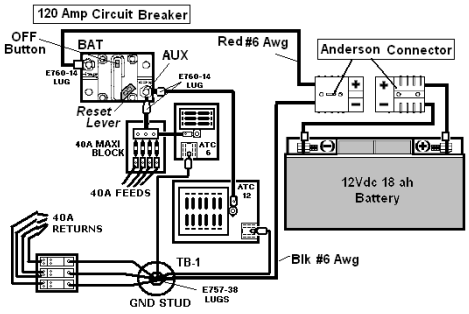

2006 *Main Power Connections*

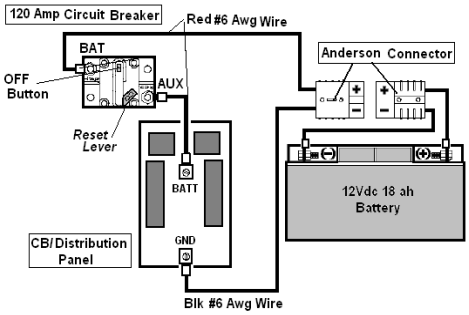

2005 *Main Power Connections*

KIT

Change to 5.4.4 Innovation First Kit of Parts - corrects the IFI phone number as follows:

2006 *FIRST* Robotics Competition

1/13/2006	Team Update	2

… please contact Innovation First at 903-453-0802.

Change to 5.4.5 Obtaining Replacement or Spare parts – changes the web site address :

Additional parts and spare Innovation First parts are available and may be purchased by visiting the IFI Store at http://www.ifirobotics.com/

Section 6 – Robot Transportation

No changes.

Section 7 – At the Events

No changes.

Section 8 – The Tournament

No changes.

Section 9 – The Awards

Section 9.1.3.19 Woodie Flowers Finalist Award : to clarify the process for re-nominating prior year Regional WFA winners to be considered as 2006 finalists, paragraph 9.1.3.19 is modified as follows:

9.1.3.19 Woodie Flowers Finalist Award

Small Parts, Inc. presents the Woodie Flowers Award to an outstanding engineer or teacher participating in each of the robotics Regional Competitions. Students choose and write about a person on their team who best demonstrates excellence in teaching science, math, and creative design. These Regional winners will receive consideration for the Championship Woodie Flowers Award. ***NOTE:*** *For 2006, teams may add an update essay to the submission for the 2004 & 2005 Regional Woodie Flowers Award winners, and those individuals will also be considered as finalists for the 2006 award.*

Section 10 – Get Published

No changes.

2006 *FIRST* Guidelines, Tips & Good Practices

GuideLines Tips & Practices - Added the following information to section G.3.3.1 Special Notes on Motors:

Fisher-Price Motors – Please note that two flavors of the Fisher-Price motors are listed on the Motor Type table. The 2006 Kit of Parts contains a pair of FP Motor/ gearboxes using one of these motors labeled either 9003 or 9012. The motors are identical except the 9012 motor has a thermal protection circuit built-in. Teams can compare the motor specifications to see the very slight difference in the characteristics. However, the Motor gearboxes supplied in the kits are identical pairs

E-Mail Blasts Sent Since Last Update

2006 *FIRST* Robotics Competition

1/13/2006	Team Update	2

1. There is a correction to the start date for accessing www.firstawards.org to submit for the Woodie Flowers Award. The correct date is Monday, **January 16th** at 12:00 noon EST and not tomorrow, January 13th as it appears in section 9.4.6 of the competition game manual. The Deadline Date for submittal is February 23rd at 11:59 pm EST.

Teams may also begin entering submissions via www.firstawards.org on January 16th for the Chairman's Award and Website Award.

We apologize for any inconvenience that this may have caused. Good Luck to all teams submitting!.

Question & Answer Items of Note

No changes.

Other Items of Note

A. *FIRST* CONTEST ANNOUNCEMENT:

In the 2006 Kit of Parts each team will find a bag of 8 AndyMark Battery Safety plugs. In normal use, these plugs should be used to identify and to protect your fully charged Exide 12V Batteries from accidental discharge. Generally the plugs are white, but AndyMark has added a special surprise for *FIRST* teams as follows:

Black Battery Plugs:
5 random *FIRST* teams have been given one black battery plug, along with their 8 white battery plugs. These 5 lucky teams have won $100 credit for AndyMark products. If your team has a black battery plug in your *FIRST* kit, send AndyMark an email at sales@andymark.biz for further directions.

B. 2005 Chassis Build Video

Teams requesting the 2005 Chassis Build video tutorial may download the file from the NASA web site at the following link:
http://robotics.nasa.gov/events/2006_kickoff.php.